User Manual

User Manual V1.0

SpeedyBee F7 V3 BL32 50A 30x30 Stack

contents

Part 1 - OverView

- Specs Overview 1
- Dimensions 2
- Package 3
- FC & ESC Connection 4

Part 2 - SpeedyBee F7 V3 Flight Controller

- Layout 5
- FC's Peripheral Connection 6
- App 7
- FC Firmware Update 8
- Specifications 9

Part 3 - SpeedyBee BL32 50A 4-in-1 ESC

- Layout 10
- Connection with Motors & Power Cable 11
- ESC Conifguration & Firmware Update 12
- Specifications 13

SpeedyBee®

Part 1 - OverView

Specs Overview

Product Name	SpeedyBee F7 V3 BL32 50A 30x30 Stack
Flight Controller	SpeedyBee F7 V3
ESC	SpeedyBee BL32 50A 4-in-1 ESC
Bluetooth	Supported. For FC & ESC parameter setting
Wireless FC Firmware Flashing	Supported
Wireless Blackbox Download	Supported
Power Input	3-6S LiPo
Mounting	30.5 x 30.5mm（4mm hole size）
Dimension	45.6mm(L) x 40mm(W) x 16.1mm(H)
Weight	29.9g

Dimensions

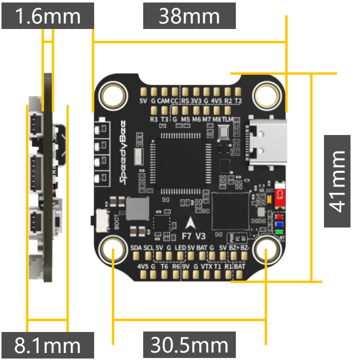
1.6mm
38mm
41mm
SpeedyBee
F7 V3
8.1mm
30.5mm

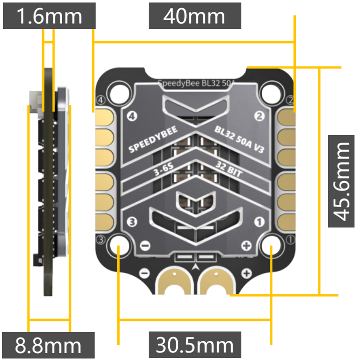
1.6mm
40mm
SPEEDYBEE
BL32 50A V3
3-6S
32 BIT
45.6mm
8.8mm
30.5mm

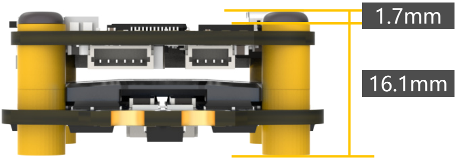

Package

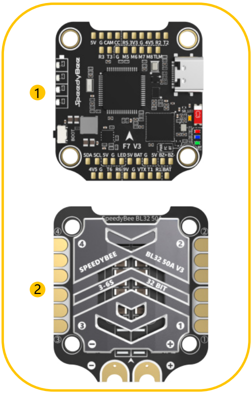
1
2
SpeedyBee
F7 V3
SpeedyBee BL32 50A
SPEEDYBEE
BL32 50A V3
3-6S
32 BIT

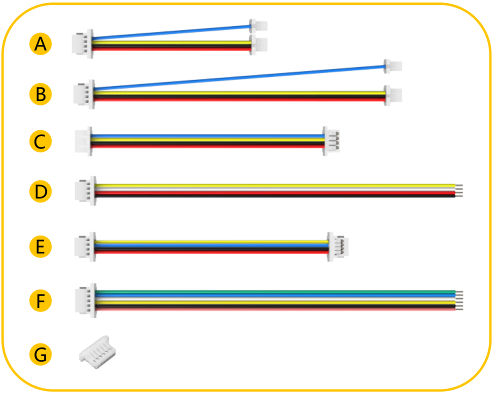

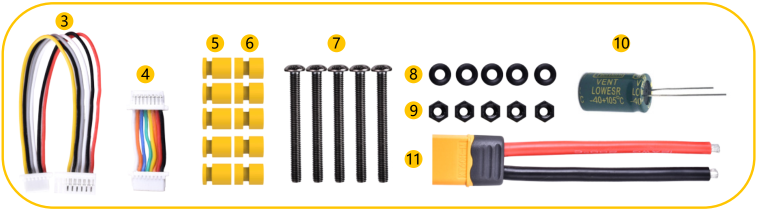
3
4
5
6
7
8
9
10
11
VENT
LOWESR
-40+105°C

① SpeedyBee F7 V3 Flight Controller x 1

② SpeedyBee BL32 50A 4-in-1 ESC x 1

③ DJI 6pin Cable(80mm) x 1

④ SH 1.0mm 15mm-length 8pin Cable(for FC-ESC connection) x 1

⑤ M3*8mm Silicone Grommets(for FC) x 5

⑥ M3*8.1mm Silicone Grommets(for ESC) x 5

- ⑦ M3*30mm Iner-hexagon Screws x 5
- ⑧ M3 silicone O Ring x 5
- ⑨ M3 Nylon Nut x 5
- ⑩ 35V 1500uF Low ESR Capacitor x 1
- ⑪ XT60 Power Cable(70mm) x 1
- Ⓐ 4pin SH1.0 to 3+2pin JST1.25 FPV Cam Cable(30mm) x 1
- Ⓑ 4pin SH1.0 to 3+2pin JST1.25 FPV Cam Cable(60mm) x 1
- Ⓒ 4pin SH1.0 to 4pin JST1.25 FPV Cam Cable(60mm) x 1
- Ⓓ 4pin SH1.0 Radio Receiver Cable(100mm) x 1
- Ⓔ 4pin SH1.0 to 4pin SH1.0 Analog VTX Cable x 1
- Ⓕ 6pin SH1.0 GPS Module Cable without Connector on another end(100mm) x 1
- Ⓖ 6pin SH1.0 GPS Module Cable Connector of another end x 1

FC & ESC Connection

Method 1 - Direct Soldering

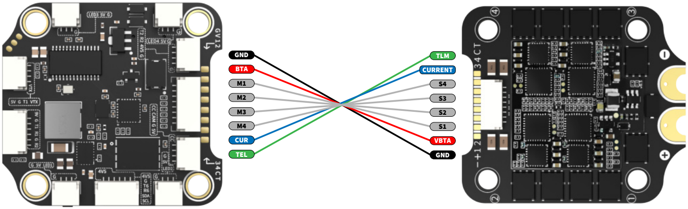
GND
BTA
M1
M2
M3
M4
CUR
TEL
TLM
CURRENT
S4
S3
S2
S1
VBTA
GND

F7 V3 Flight Controller

BL32 50A 4-in-1 ESC

Method 2 - All connectors

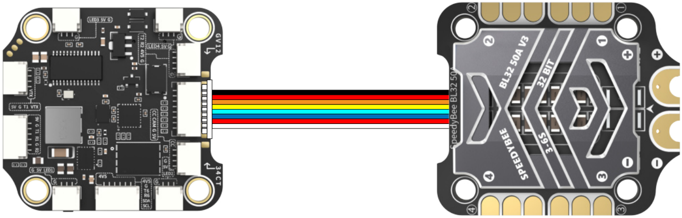

F7 V3 Flight Controller

BL32 50A 4-in-1 ESC

Part 2 - SpeedyBee F7 V3 Flight Controller

Layout

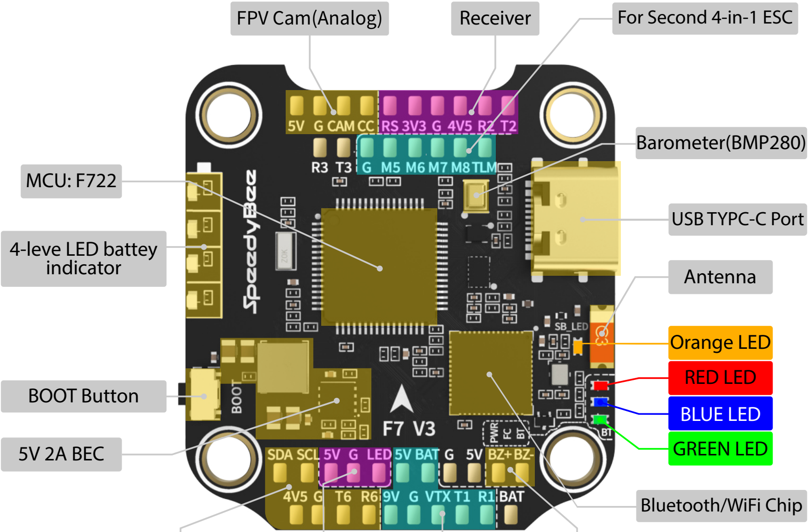
FPV Cam(Analog)
Receiver
For Second 4-in-1 ESC
Barometer(BMP280)
MCU: F722
USB TYPC-C Port
4-leve LED battey indicator
Antenna
Orange LED
RED LED
BLUE LED
GREEN LED
BOOT Button
5V 2A BEC
Bluetooth/WiFi Chip
5V G CAM CC
RS 3V3 G 4V5 R2 T2
R3 T3
G M5 M6 M7 M8 TLM
SpeedyBee
BOOT
SB_LED
F7 V3
PWR FC BT
BT
SDA SCL 5V G LED 5V BAT G 5V BZ+ BZ-
4V5 G T6 R6 9V G VTX T1 R1 BAT

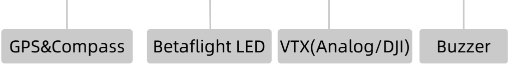
GPS&Compass
Betaflight LED
VTX(Analog/DJI)
Buzzer

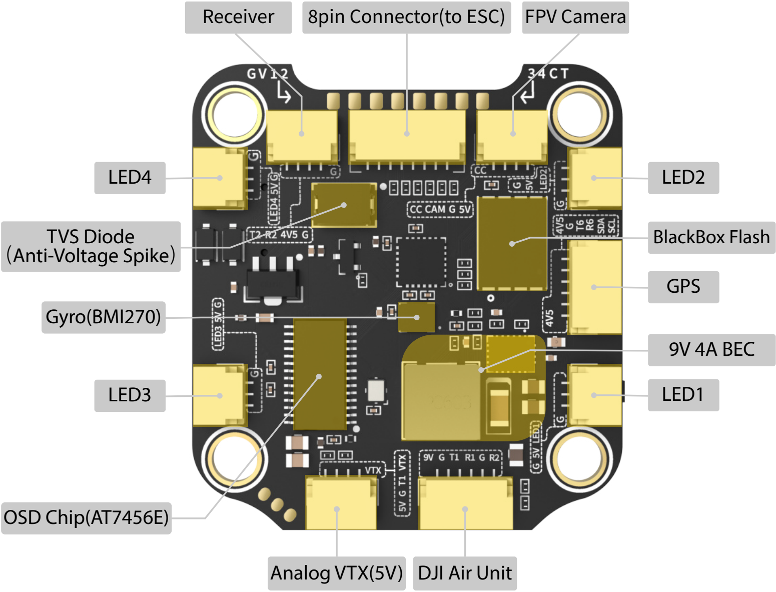
Receiver
8pin Connector(to ESC)
FPV Camera
LED4
LED2
TVS Diode (Anti-Voltage Spike)
BlackBox Flash
GPS
Gyro(BMI270)
9V 4A BEC
LED3
LED1
OSD Chip(AT7456E)
Analog VTX(5V)
DJI Air Unit
GV12
34CT
CC CAM G 5V
T2 R2 4V5 G
9V G T1 R1 G R2
5V G T1 VTX
VTX
4V5 G T6 R6 SDA SCL
4V5
LED4 5V G
LED3 5V G
G 5V LED1
G 5V LED2

■ LED Indicator Definition

- 🟥 **RED LED** - Power Indicator.Solid Red after powering up.
- 🟩 **GREEN LED** - Bluetooth status light. Solid Green indicates Bluetooth is connected.
- 🟦 **BLUE LED** - Flight controller status light which is controlled by the flight controller firmware.
- 🟧 **Orange LED** - LED Control Mode Indicator. It indicates the 4 sets of LEDs connected to LED1-LED4 connectors on the bottom side are controlled by Betaflight firmware(BF_LED mode) or the Bluetooth Chip(SB_LED mode).

  Solid Orange ： tindicates the 4 x LEDs are in SB_LED mode. In this mode, when the FC is powered on and in standby mode, press the BOOT button to cycle the display modes of the LEDs. You could also change modes in the app wirelessly.

OFF : indicates the 4 x LEDs are controlled by Betaflight firmware.

Long press the button for 3 seconds to switch the control modes between BF_LED mode and SB_LED mode.

FC’s Peripheral Connection

Wiring Diagram
Method 1 - Direct Soldering

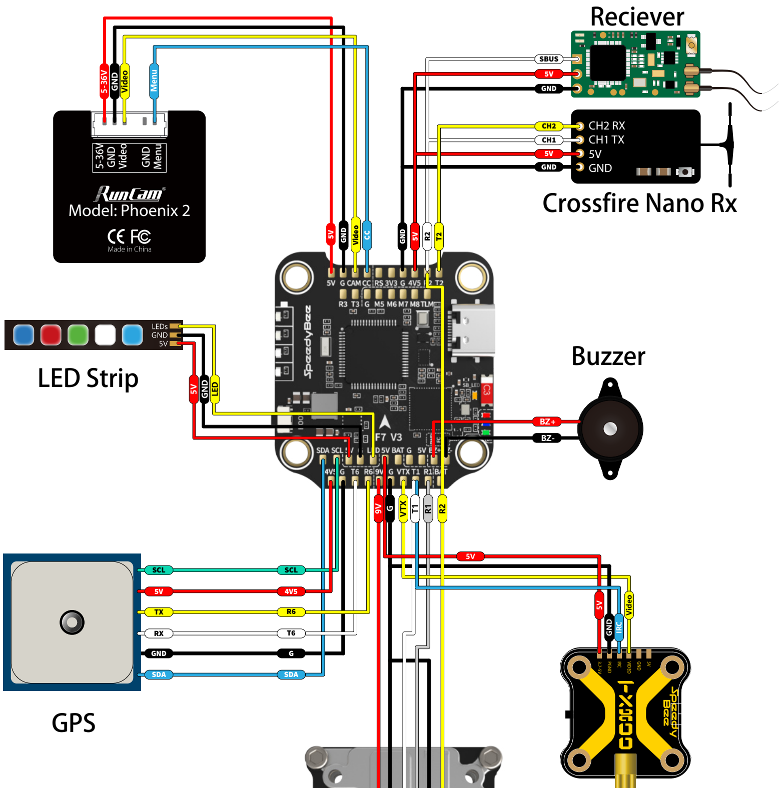
5-36V
GND
Video
Menu
RunCam
Model: Phoenix 2
Made in China
Reciever
SBUS
5V
GND
CH2
CH1
CH2 RX
CH1 TX
5V
GND
Crossfire Nano Rx
5V
GND
Video
CC
GND
5V
R2
T2
5V G CAM CC RS 3V3 G 4V5 R2 T2
R3 T3 G M5 M6 M7 M8 TLM
SpeedyBee
F7 V3
SB_LED
LEDs
GND
5V
LED Strip
5V
GND
LED
Buzzer
BZ+
BZ-
SDA SCL 5V G LED 5V BAT G 5V BZ+ BZ-
4V5 G T6 R6 9V G VTX T1 R1 BAT
9V
G
VTX
T1
R1
R2
SCL
5V
TX
RX
GND
SDA
SCL
4V5
R6
T6
G
SDA
GPS
5V
5V
GND
IRC
Video
3.7-5V
PGND
IRC
VIDEO
GND
5V
SpeedyBee

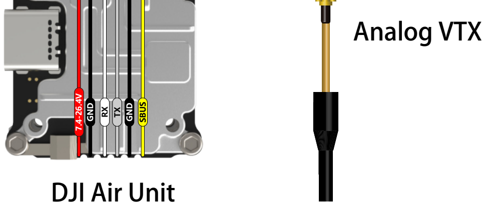
7.4-26.4V
GND
RX
TX
GND
SBUS
DJI Air Unit
Analog VTX

Method 2 - All connectors

To recognize the wires in the package better, we marked some of these wires with letters(from A to F). Please find the right wires accroding to their letters.

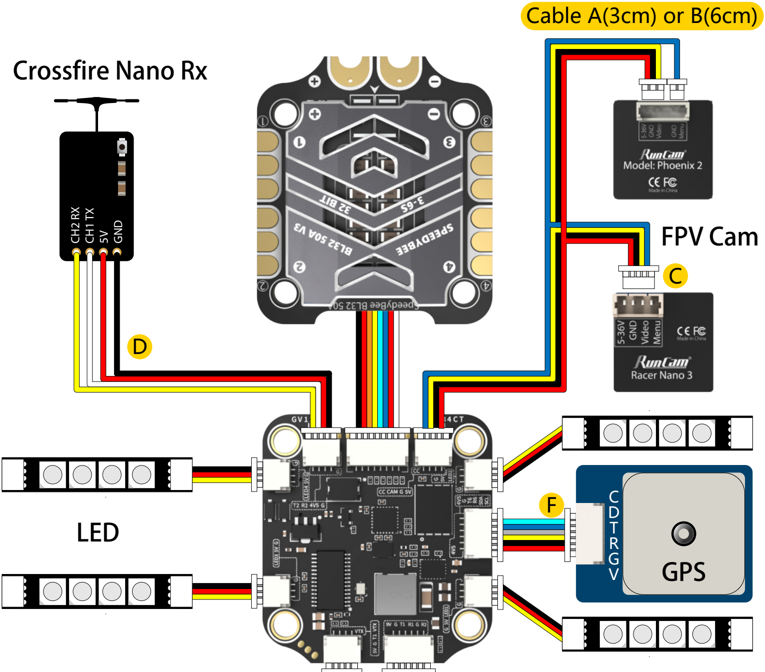
Cable A(3cm) or B(6cm)
Crossfire Nano Rx
CH2 RX
CH1 TX
5V
GND
D
SpeedyBee BL32 50A
32 BIT
3-6S
BL32 50A V3
SPEEDYBEE
5-36V
GND
Video
GND
Menu
RunCam
Model: Phoenix 2
FPV Cam
C
5-36V
GND
Video
Menu
RunCam
Racer Nano 3
LED
F
C
D
T
R
G
V
GPS

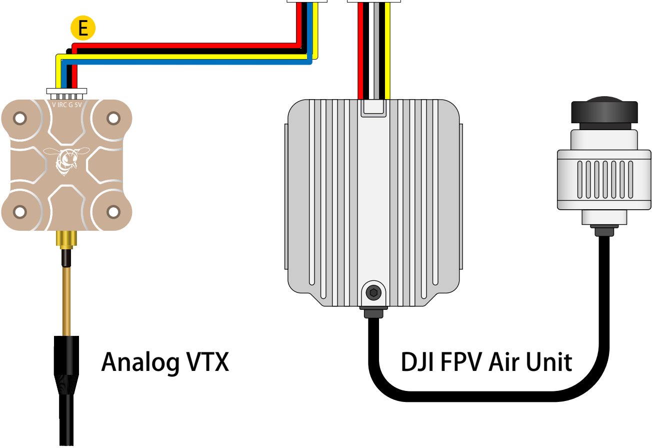
E
V IRC G 5V
Analog VTX
DJI FPV Air Unit

App

Get the SpeedyBee App

Search ‘SpeedyBee’ on Google Play or App Store. Or download the Android .apk file on our website: https://www.speedybee.com/download

Connect the App

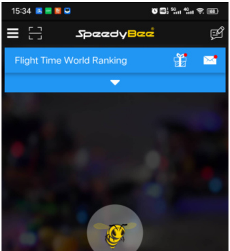
15:34
SpeedyBee
Flight Time World Ranking

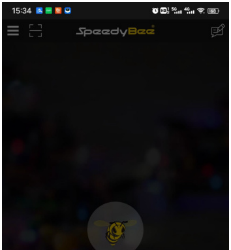
15:34
SpeedyBee

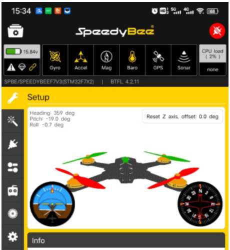
15:34
SpeedyBee
15.84v
Gyro
Accel
Mag
Baro
GPS
Sonar
CPU load (2%)
none
Setup
Reset Z axis, offset: 0.0 deg
Info

SPBE/SPEEDYBEEF7V3(STM32F7X2) | BTFL 4.2.11

Heading: 359 deg
Pitch: -19.0 deg
Roll: -0.7 deg

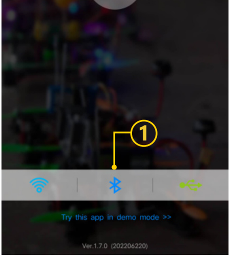
1
Try this app in demo mode >>
Ver.1.7.0 (202206220)

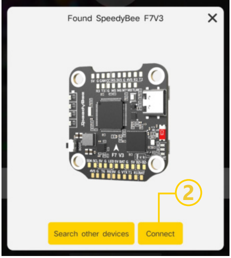
Found SpeedyBee F7V3
2
Search other devices
Connect

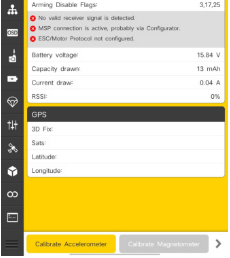
Arming Disable Flags: 3,17,25

No valid receiver signal is detected.

MSP connection is active, probably via Configurator.

ESC/Motor Protocol not configured.

Battery voltage: 15.84 V

Capacity drawn: 13 mAh

Current draw: 0.04 A

RSSI: 0%

GPS

3D Fix:

Sats:

Latitude:

Longitude:

OSD
Calibrate Accelerometer
Calibrate Magnetometer

FC Firmware Update

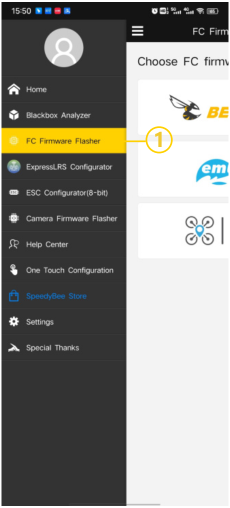
15:50
FC Firm
Home
Blackbox Analyzer
FC Firmware Flasher
1
ExpressLRS Configurator
ESC Configurator(8-bit)
Camera Firmware Flasher
Help Center
One Touch Configuration
SpeedyBee Store
Settings
Special Thanks
Choose FC firmw
BE
em

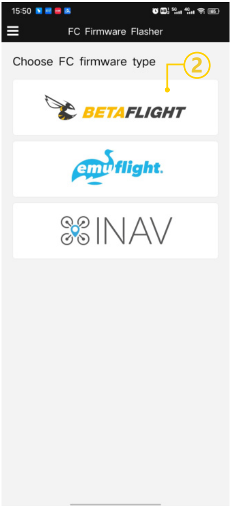
15:50
FC Firmware Flasher
Choose FC firmware type
2
BETAFLIGHT
emuflight.
INAV

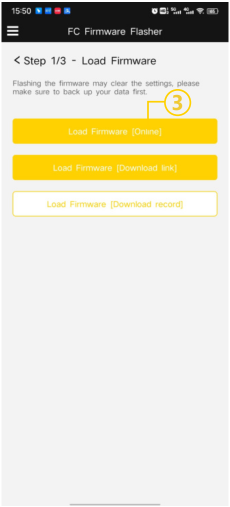
< Step 1/3 - Load Firmware

Flashing the firmware may clear the settings, please make sure to back up your data first.

15:50
FC Firmware Flasher
3
Load Firmware [Online]
Load Firmware [Download link]
Load Firmware [Download record]

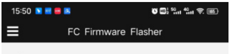
15:50
FC Firmware Flasher

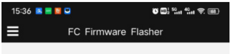
15:36
FC Firmware Flasher

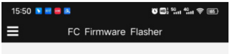
15:50
FC Firmware Flasher

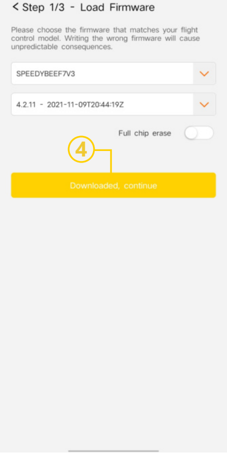

< Step 1/3 - Load Firmware

Please choose the firmware that matches your flight control model. Writing the wrong firmware will cause unpredictable consequences.

SPEEDYBEEF7V3

4.2.11 - 2021-11-09T20:44:19Z

Full chip erase

④
Downloaded, continue

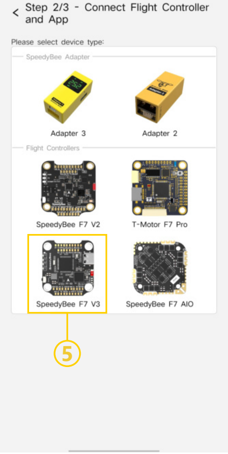

< Step 2/3 - Connect Flight Controller and App

Please select device type:

SpeedyBee Adapter
Adapter 3
Adapter 2
Flight Controllers
SpeedyBee F7 V2
T-Motor F7 Pro
SpeedyBee F7 V3
SpeedyBee F7 AIO
⑤

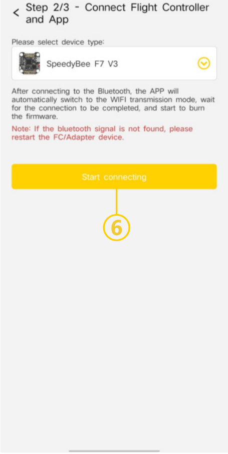

< Step 2/3 - Connect Flight Controller and App

Please select device type:

SpeedyBee F7 V3

After connecting to the Bluetooth, the APP will automatically switch to the WIFI transmission mode, wait for the connection to be completed, and start to burn the firmware.

Note: If the bluetooth signal is not found, please restart the FC/Adapter device.

Start connecting
⑥

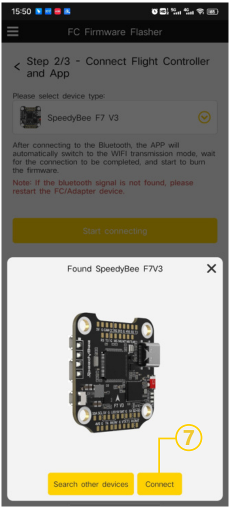

15:50

FC Firmware Flasher

< Step 2/3 - Connect Flight Controller and App

Please select device type:

SpeedyBee F7 V3

After connecting to the Bluetooth, the APP will automatically switch to the WIFI transmission mode, wait for the connection to be completed, and start to burn the firmware.

Note: If the bluetooth signal is not found, please restart the FC/Adapter device.

Found SpeedyBee F7V3

Start connecting
⑦
Search other devices
Connect

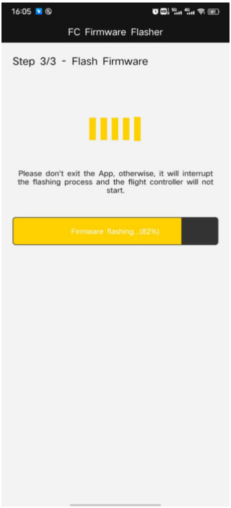

16:05

FC Firmware Flasher

Step 3/3 - Flash Firmware

Please don't exit the App, otherwise, it will interrupt the flashing process and the flight controller will not start.

Firmware flashing...(82%)

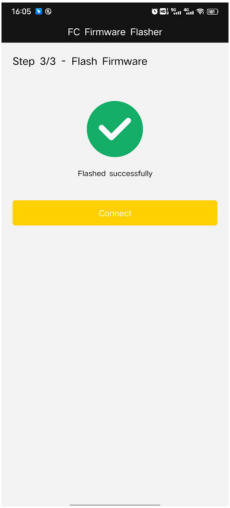

16:05

FC Firmware Flasher

Step 3/3 - Flash Firmware

Flashed successfully

Specifications

Product Name	**SpeedyBee F7 V3 Flight Controller**
MCU	STM32F722
IMU(Gyro)	BMI270
USB Port Type	Type-C
Barometer	BMP280
OSD Chip	AT7456E chip
BLE Bluetooth	Supported. Used for Flight Controller configuration
Flash FC Firmware Wirelessly	Supported. Please enter MENU > FC Firmware Flasher
Download/Analyze Blackbox	Supported.Please enter MENU > Blackbox Analyzer
DJI Air Unit Connection Way	Two ways supported: 6-pin connector or direct soldering.
Flash(for BlackBox)	500MB
BetaFlight Camera Control Pad	Yes(CC pad on the front side)
Power Input	3S - 6S Lipo
5V Output	10 groups of 5V output, three +5V pads and 1 BZ+ pad(used for Buzzer) on front side, and 6 +5V output included in the connectors on bottom side. The total current load is 2A.
9V Output	2 groups of 9V output, one +9V pad on front side and other included in a connector on bottom side. The total current load is 4A.
3.3V Output	Supported. Designed for 3.3V-input receivers. Up to 500mA current load.
4.5V Output	Supported. Designed for receiver and GPS module even when the FC is powered through the USB port. Up to 1A current load.
ESC Signal Pads	M1 - M4 on bottom side and M5-M8 on front side.
UART	5 sets(UART1, UART2, UART3, UART4(For ESC Telemetry), UART6)
ESC Telemetry UART	R4(UART4)
I2C	Supported. SDA & SCL pads on front side. Used for magnetometer, sonar, etc.
LED Pad	Used for WS2812 LED controlled by Betaflight firmware.
Buzzer	BZ+ and BZ- pad used for 5V Buzzer
BOOT Button	Supported. [A]. Press and hold BOOT button and power the FC on at the same time will force the FC to enter DFU mode, this is for firmware flashing when the FC gets bricked. [B]. When the FC is powered on and in standby mode, the BOOT button can be used to controller the LED strips connected to LED1-LED4 connectors on the bottom side. By default, short-press the BOOT button to cycle the LED displaying mode. Long-press the BOOT button to switch between SpeedyBee-LED mode and BF-LED mode. Under BF-LED mode, all the LED1-LED4 strips will be controlled by Betaflight firmware.
RSSI Input	Supported. Named as RS on the front side.
SmartPort	Use any TX pad of UART for the SmartPort feature.
Supported Flight Controller Firmware	BetaFlight(Default), EMUFlight, INAV
Firmware Target Name	SPEEDYBEEF7V3
Mounting	30.5 x 30.5mm(4mm hole diameter)
Dimension	41(L) x 38(W) x 8.1(H)mm
Weight	10.7g

Part 3 - SpeedyBee BL32 50A 4-in-1 ESC

Layout

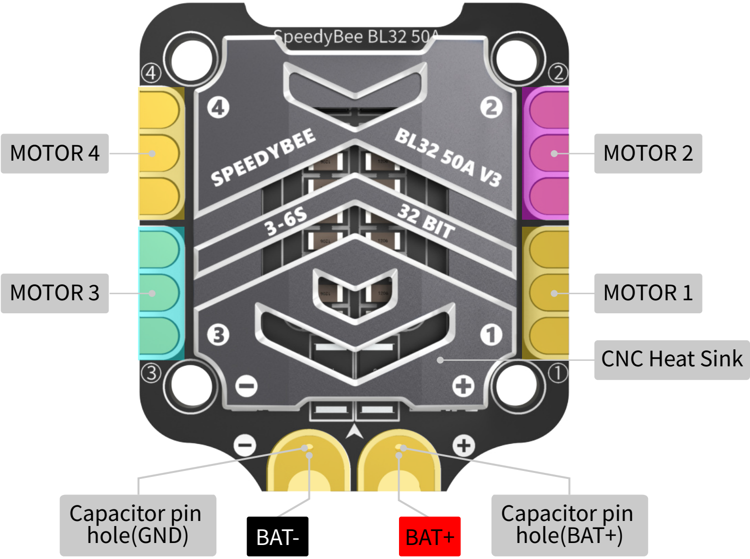
SpeedyBee BL32 50A
SPEEDYBEE
BL32 50A V3
3-6S
32 BIT
④
②
③
①

MOTOR 4

MOTOR 2

MOTOR 3

MOTOR 1

CNC Heat Sink

Capacitor pin hole(GND)

BAT-

BAT+

Capacitor pin hole(BAT+)

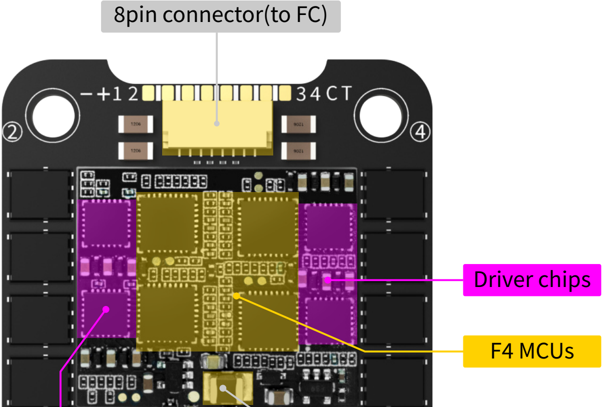

8pin connector(to FC)

Driver chips

F4 MCUs

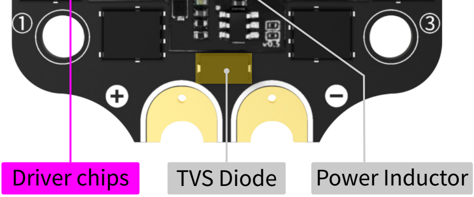
①
③
Driver chips
TVS Diode
Power Inductor

Connection with Motors & Power Cable 11/13

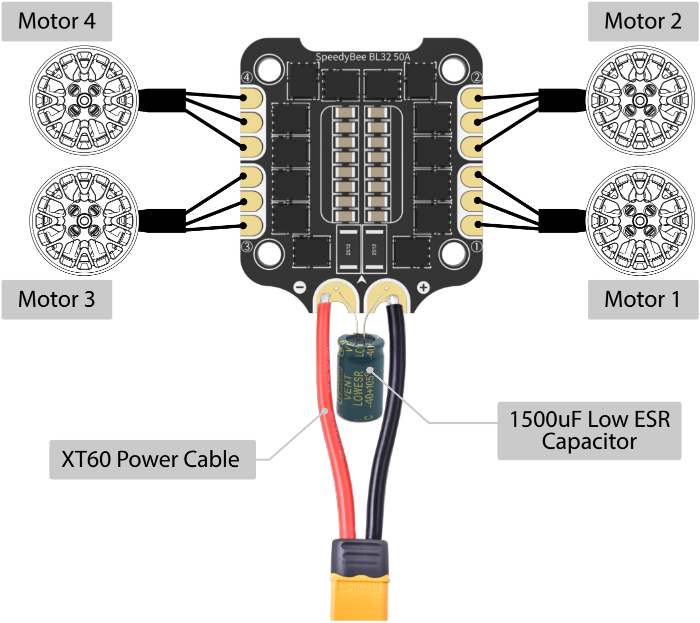
Motor 4
Motor 2
SpeedyBee BL32 50A
④
②
③
①
2512
2512
Motor 3
Motor 1
1500uF Low ESR Capacitor
XT60 Power Cable

- **Note**: In order to prevent the stack from being burnt out instantaneous voltage spikes on powering up, it is strongly recommended to use the Low ESR capacitor in the package.

ESC Conifguration & Firmware Update

- This ESC is a 32-bit ESC running BLHeli32 firmware inside. Since the BLHeli32 is close-sourced. So ESC configuration & firmware update can be done wirelessly in the SpeedyBee app. Please download the lastest BLHeliSuit32 configurator to setup your ESC at https://github.com/bitdump/BLHeli/releases.

- Even so, you could still change motor directions in the app for this ESC. Please connect to the app, go to Motors page, click the button shown below. Then experience the easiest and coolest way to change motor directions.

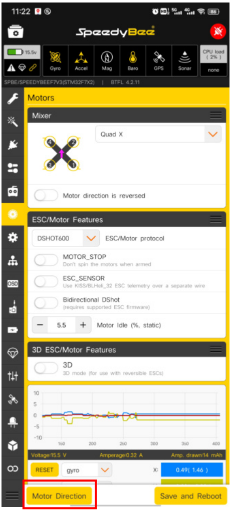

11:22
SpeedyBee
15.5v
Gyro
Accel
Mag
Baro
GPS
Sonar
CPU load (2%)
none
SPBE/SPEEDYBEEF7V3(STM32F7X2) | BTFL 4.2.11
Motors
Mixer
Quad X
Motor direction is reversed
ESC/Motor Features
DSHOT600
ESC/Motor protocol
MOTOR_STOP
Don't spin the motors when armed
ESC_SENSOR
Use KISS/BLHeli_32 ESC telemetry over a separate wire
Bidirectional DShot
(requires supported ESC firmware)
5.5
Motor Idle (%, static)
3D ESC/Motor Features
3D
3D mode (for use with reversible ESCs)
Voltage:15.5 V
Amperage:0.32 A
Amp. drawn:14 mAh
RESET
gyro
0.49(1.46)
Motor Direction
Save and Reboot

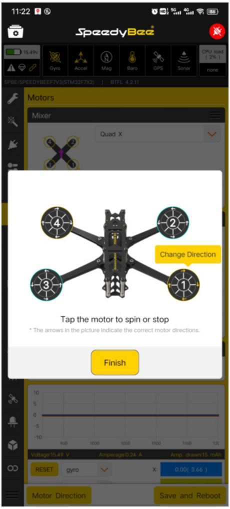

11:22
SpeedyBee
Motors
Mixer
Quad X
4
2
3
1
Change Direction
Finish
Motor Direction
Save and Reboot

Tap the motor to spin or stop

* The arrows in the picture indicate the correct motor directions.

Specifications

Product Name	**SpeedyBee BL32 50A 4-in-1 ESC**
Firmware	SpeedyBee BL32 50A
Configurator Download Link	http://github.com/bitdump/BLHeli/releases
Continuous Current	50A * 4
Burst Current	55A(5S)
TVS Protective diode	Yes
Heat Sink	Yes
External Capacitor	1500uF Low ESR Capacitor(In the package)
ESC Protocol	DSHOT300/600
Power Input	3-6S LiPo
Power Output	VBAT
Current Sensor	Support (Scale=490 Offset=0)
Mounting	30.5 x 30.5mm(4mm hole diameter)
Dimension	45.6(L) * 40(W) * 8.8mm(H)
Weight	19.2g with heat sink